GENERAL NOTES:
G.C. TO PROVIDE BLOCKING IN PARTITION BEHIND ALL MILLWORK
ALL CAULKING BY OTHERS

NOTE: ALL DIMENSIONS WILL BE FIELD VERIFIED PRIOR TO FABRICATION

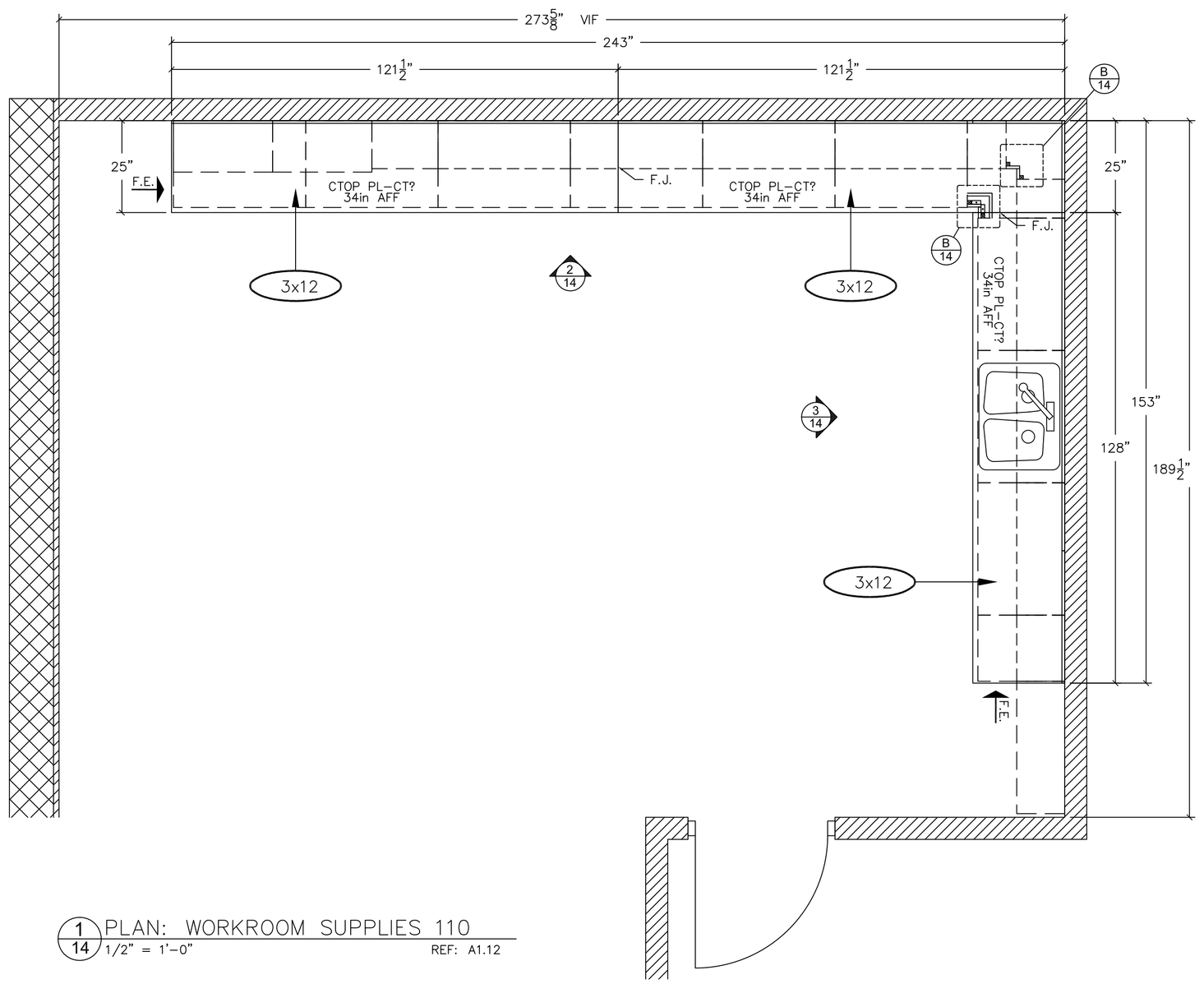

1/14 PLAN: WORKROOM SUPPLIES 110
1/2" = 1'-0"
REF: A1.12

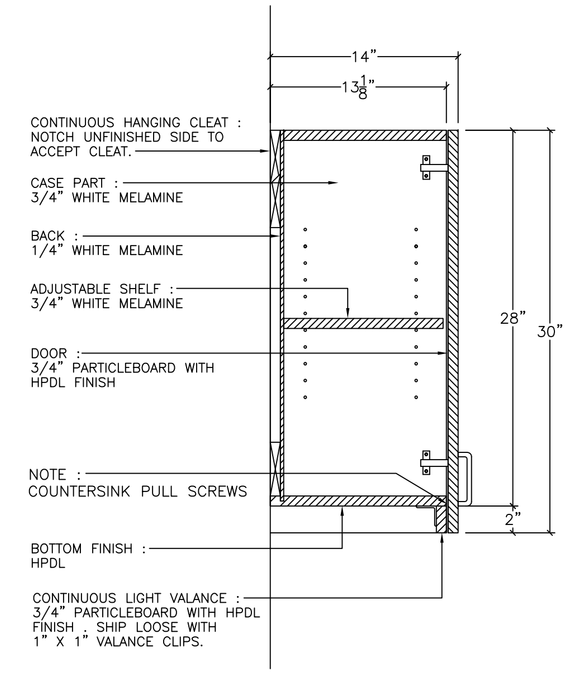

4/14 SECTION
1 1/2" = 1'-0"

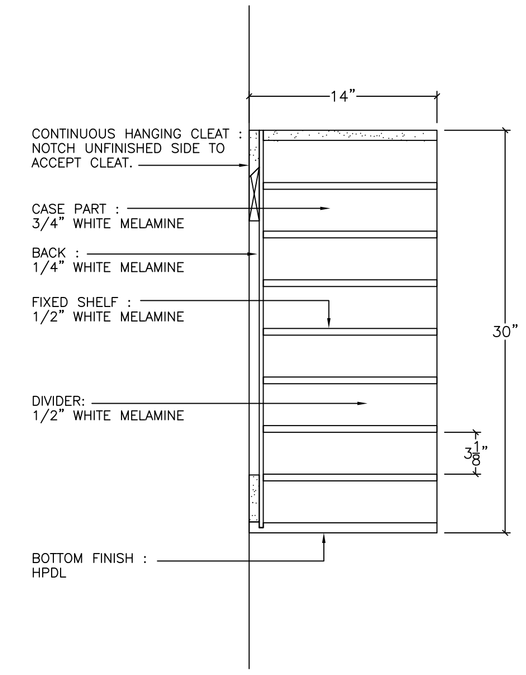

5/14 SECTION
1 1/2" = 1'-0"

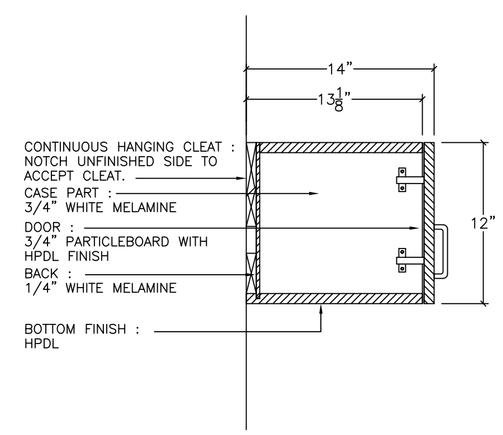

6/14 SECTION
1 1/2" = 1'-0"

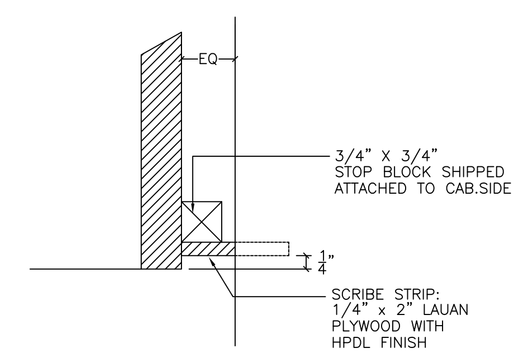

A/14 DETAIL
6" = 1'-0"

FINISH SCHEDULE

USE	PL#	MANUFACTURER / NAME / # / FINISH
CTOPS & SPLASHES	PL-#	TBD
BASE CABINETS	PL-#	TBD
WALL CABINETS	PL-#	TBD

	MATCH	PVC or HPDL	MANUF. / ITEM #
BASE EDGES	PL-#	V3	TBD
WALL EDGES	PL-#	V3	TBD

HINGES: BLUM CLIP TOP 170° 17MM OVERLAY SELF CLOSING HINGE # 71T6580 w/ 0 MM. BASEPLATE # 173L8100

PULLS: BERENSON 6130-2SC-P WIRE BRUSHED CHROME 4"

SLIDES: ACCURIDE #3834C 1" OVR TVL FULL EXT. SLIDE, 100 LBS. RATED

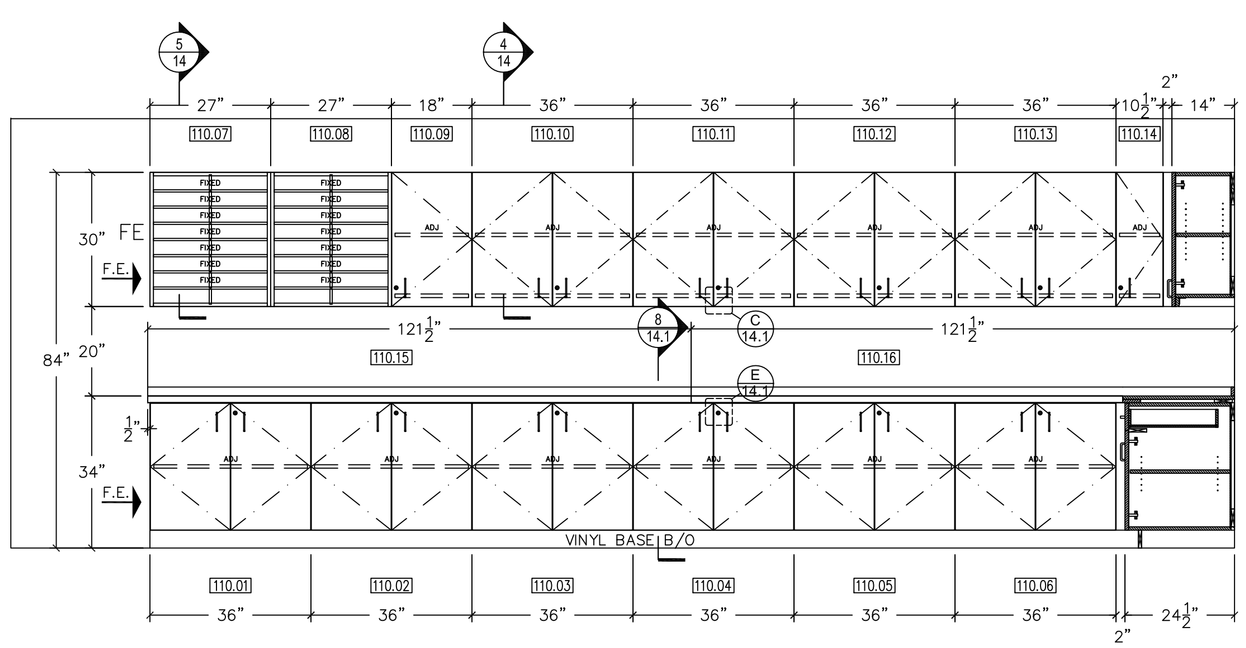

2/14 ELEVATION: WORKROOM SUPPLIES 110
1/2" = 1'-0"
REF: 16/A4.02

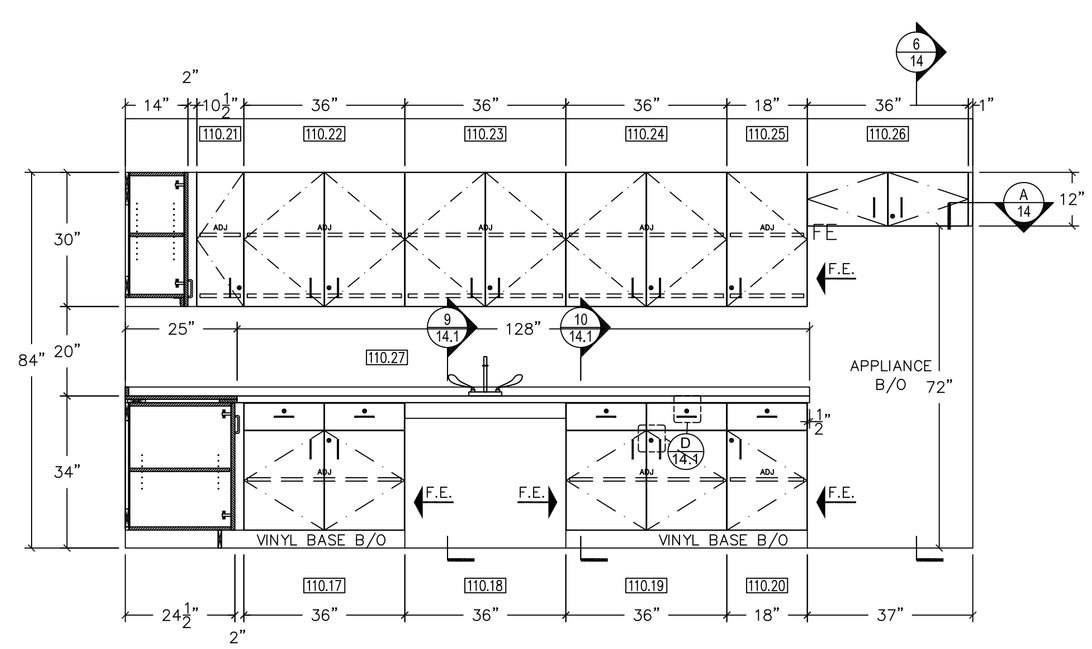

3/14 ELEVATION: WORKROOM SUPPLIES 110
1/2" = 1'-0"
REF: 17/A4.02

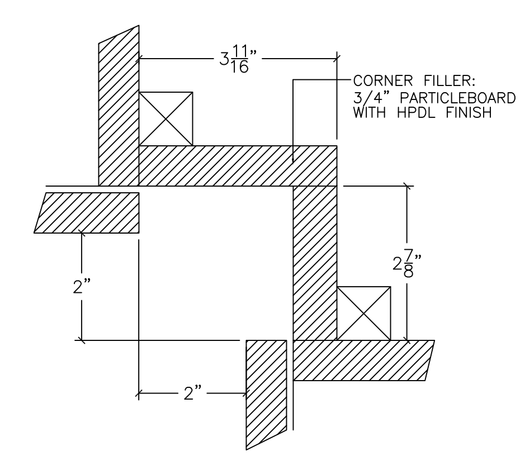

B/14 DETAIL
6" = 1'-0"

REVISIONS
DATE

ARCHITECT / DESIGNER: MURPHY & DITTENHAFER

CONTRACTOR: MAHOGANY

PROJECT: UM SCHOOL OF PUBLIC HEALTH

DRAWING TITLE: WORKROOM SUPPLIES 110

Mahogany, Inc.
Specializing in Quality Construction
www.mahoganyconstr.com

910 West Pratt Street
Baltimore, Maryland 21223
Phone: (410) 727-0334
Fax: (410) 727-0588

DRAWN BY: GP
DATE: 07/31/2009
SCALE: AS NOTED
JOB NO.#: 5247
MILL ORDER NO.#: 18
DWG. NO.#: 14